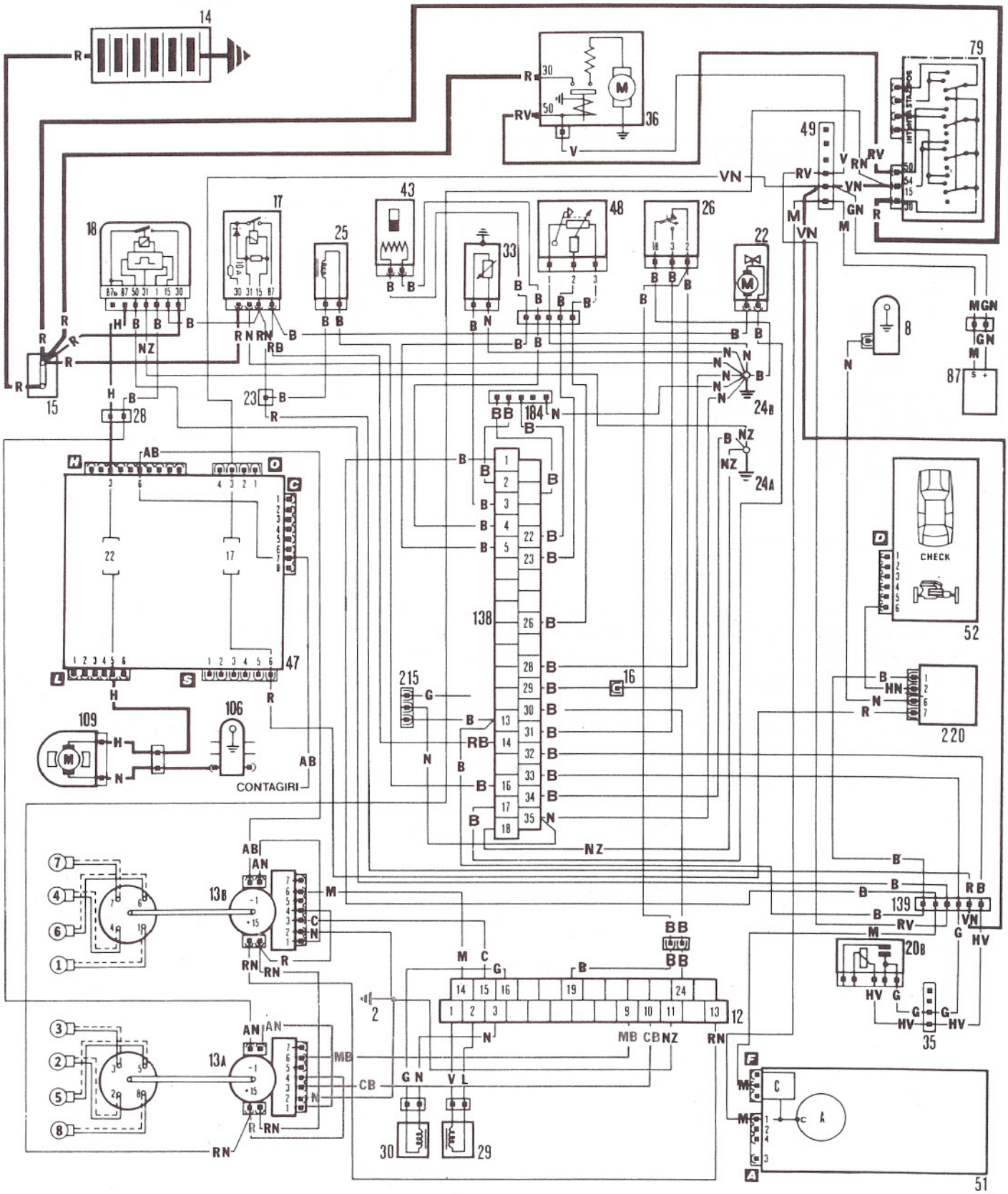

See the key on page 166 to identify the system components.

10.

CHECKING POWER MODULE ON IGNITION COIL (13 B)

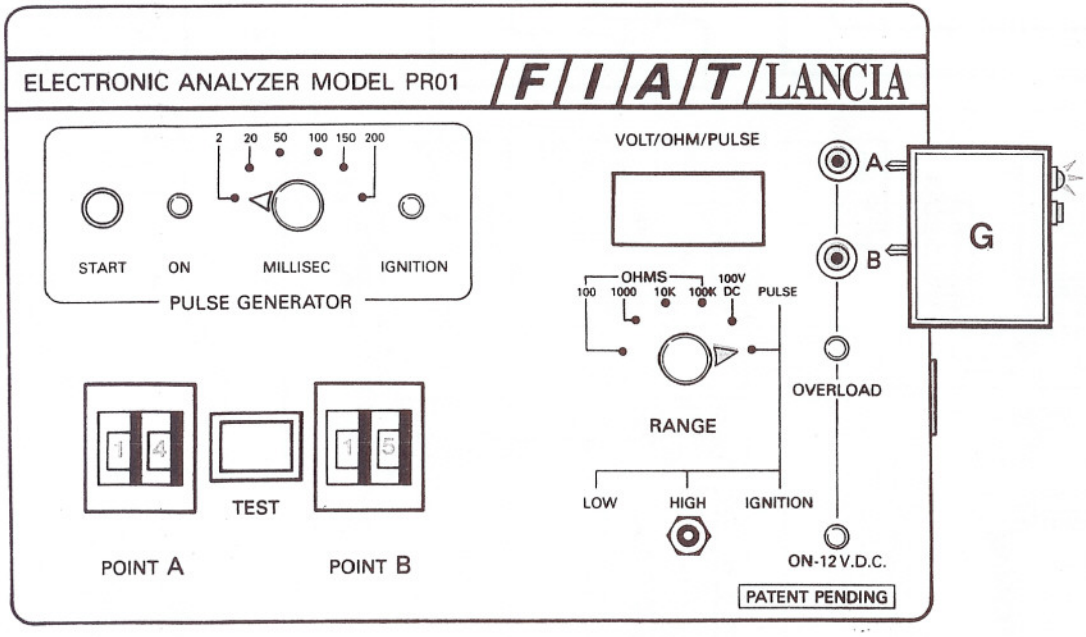

Multimeter position
PULSE

Selector position
A 14
B 15

Insert the impulse generator (G) in the instrument red (A) and black (B) bushes. Disconnect the high tension lead comoing from the ignition coil (13 B) from the distributor cap (1-6-4-7) and connect it to earth via a spark gap. Connect a cable bewteen the instrument black bush (B) and an earth point.

Turn the ignition switch to the ON position.

Press the impuluse generator red button. The impulse generator red LED should come on and a spark should be seen. If there is no spark, check the continuity of the cable shown in the diagram overleaf using an ohmmter.

If not faults are detected, replace the power module on the ignition coil (13 B).

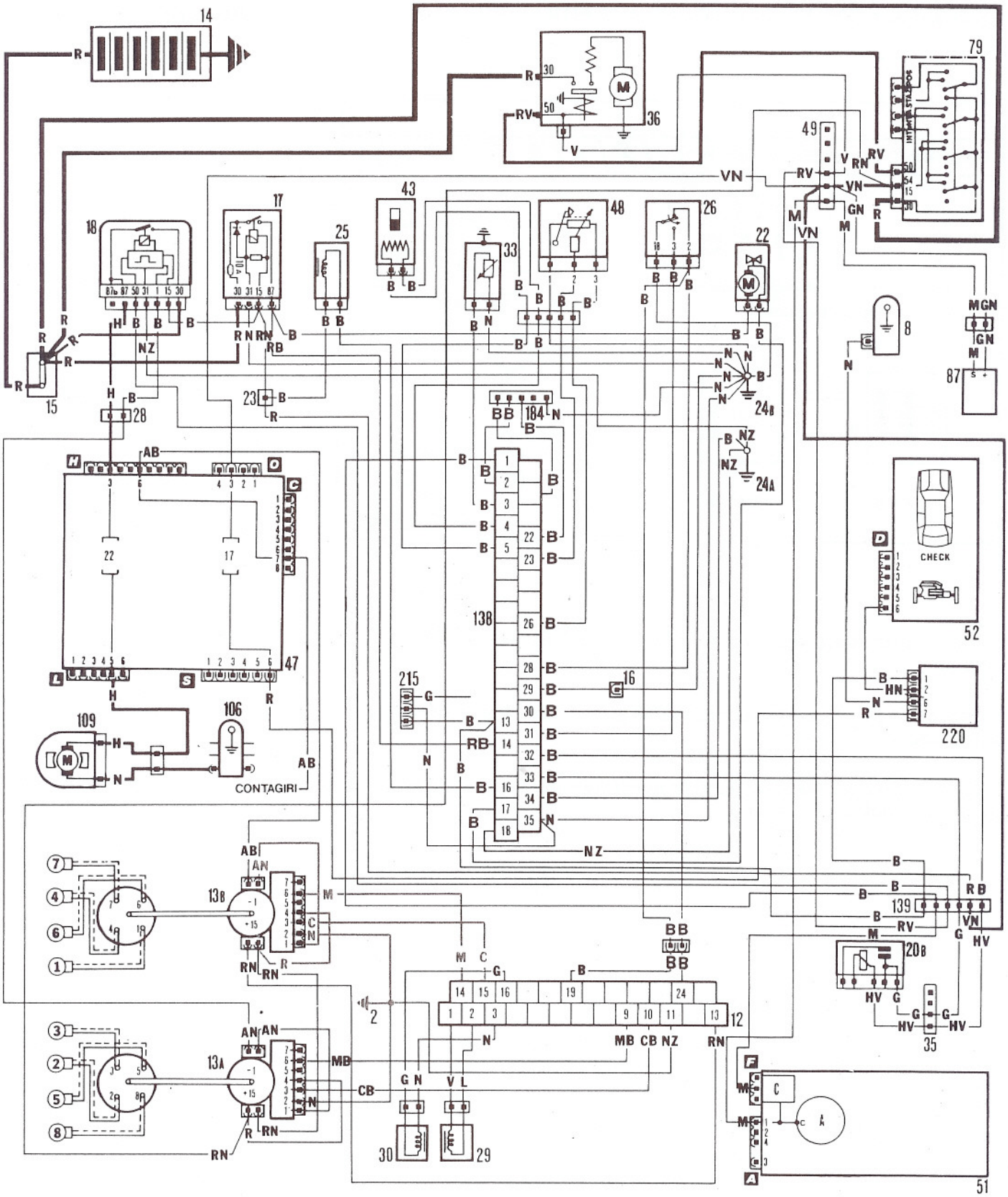

See the key on page 166 to identify the system components.

10.

CHECKING CONTINUITY OF CIRCUIT FOR CORRECT ADVANCE WITH BUTTERFLY CLOSED

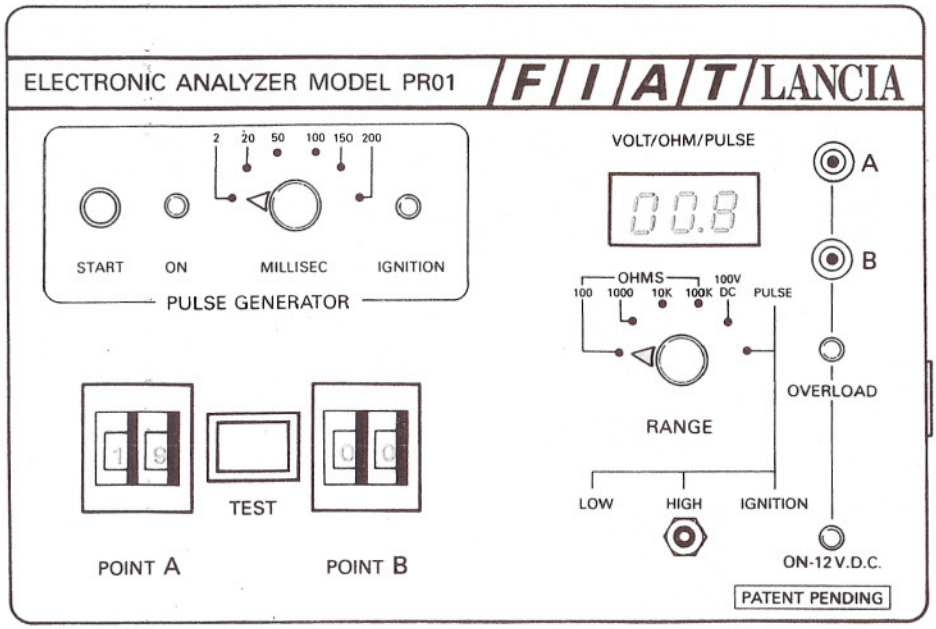

Multimeter position
100 Ω

Selector position
A 19
B 00

Instrument reading: NORMAL VALUE less than 1Ω

If the reading is different from the value given, check the continuity of the circuit shown in the diagram overleaf using an ohmmeter.

If the results of all the tests are alright and the ignition system is not working properly, replace the Microplex control unit.

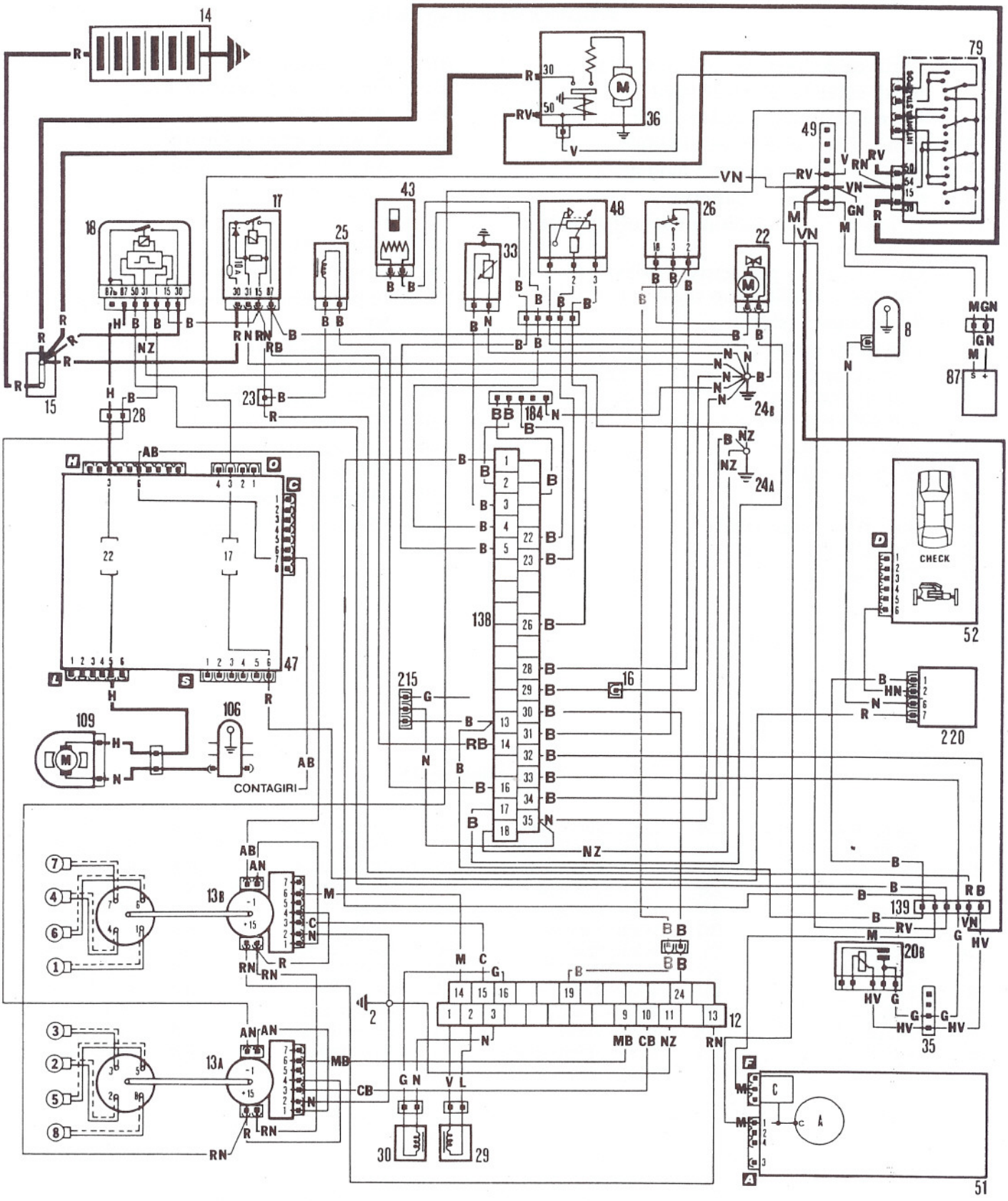

See the key on page 166 to identify the system components.

WIRING DIAGRAM KEY

2. Earth cable loom, on left side member
8. Earth cable loom, right front
12. Microplex ignition control unit
13 A. Ignition coil with power module
13 B. Ignition coil with power module
15. Connector (for + battery)
16. Connector for inhibiting cut- off function (not used)
17. Overloading protective relay (KE3-Jetronic and idle servo regulator supply)
18. Speedometer relay
22. Idle servo regulator
23. Connector (from + 15/54 of the ignition switch) for supplying the protective relay and cold start injector
24 A. Earth on engine
24 B. Earth on engine
25. Cold start injector
26. Butterfly valve switch
28. Connection
29. TDC sensor
30. Rpm sensor
33. Coolant temperature sensor
36. Stater motor
43. Pressure servo regulator
48. Air flow meter potentiometer
49. Connection
51. Instrument panel
52 Control System
79. Ignition switch
87. Impulse generator for electronic speedometer
106. Rear earth cable loom (in luggage compartment)
109. Electric fuel pump
138. KE3-Jetronic control unit
139. Connection (between injection cables and dashboard transverse cables)
184. Diagnostic socket (not used)
215. Connection for auto-diagnostic function
220. Auto-diagnostic function warning light control unit

Cable colour code

A	Light Blue	**AB**	Light Blue-White	**CB**	Orange-White	**LR**	Blue-Red
B	White	**AG**	Light Blue-Yellow	**CN**	Orange-Black	**LV**	Blue-Green
C	Orange	**AN**	Light Blue-Black	**GN**	Yellow-Black	**MB**	Brown-White
G	Yellow	**AR**	Light Blue-Red	**GL**	Yellow-Blue	**MN**	Brown-Black
H	Grey	**AV**	Light Blue-Green	**GR**	Yellow-Red	**NZ**	Black-Violet
L	Blue	**BG**	White-Yellow	**GV**	Yellow-Green	**RB**	Red-White
M	Brown	**BL**	White-Blue	**HG**	Grey-Yellow	**RG**	Red-Yellow
N	Black	**BN**	White-Black	**HN**	Grey-Black	**RN**	Red-Black
R	Red	**BR**	White-Red	**HR**	Grey-Red	**RV**	Red-Green
S	Pink	**BV**	White-Green	**LB**	Blue-White	**SN**	Pink-Black
V	Green	**BZ**	White-Violet	**LG**	Blue-Yellow	**VB**	Green-White
Z	Violet	**CA**	Orange-Light Blue	**LN**	Blue-Black	**VN**	Green-Black
						VR	Green-Red

MICROPLEX IGNITION SYSTEM

SUMMARY OF INFORMATION AND TESTS							
Order of operations	Selector position		Multimeter position	Operations to be carried out	Normal values	OK	Not OK See page
	A	B					
1	11	00	100Ω	Check ignition system control unit earth *Connect the instrument black bush to the negative battery terminal via a cable*	lower than 1Ω	continue ⬇	148
2	13	11	100 V DC	Check ignition control unit supply *Ignition switch in ON position*	battery voltage above 11 V	continue ⬇	150
3	01	02	1000Ω	Checking continuity of TDC sensor	600-800Ω	continue ⬇	152
4	16	03	1000Ω	Check continuity of engine rpm sensor	600-800Ω	continue ⬇	154
5	01	02	PULSE LOW	Check TDC sensor gap and magentic efficiency *Start the engine for around 15 seconds*	above 7	continue ⬇	156
6	16	03	PULSE HIGH	Check engine rpm sensor gap and magnetic efficiency *Start up the engine for around 15 seconds*	above 7	continue ⬇	158
7	09	10	PULSE	Check efficiency of power module (13 A) *Insert the impulse generator in the instrument red (A) and black (B) bushes. Disconnect the high tension lead coming from the ignition coil (13 A) from the distributor cap (8050203) and connect it to earth via a spark gap. Connect a cable between the instrument black bush (B) and an earth point. Turn the ignition switch to the ON position. Press the red button on the impulse generator*	there should be a spark in the spark gap	continue ⬇	160
8	14	15	PULSE	Check power module (13 B). *AS ABOVE TEST (number 7)* *Different ignition distributor (1-6-4-7)*	there should be a spark in the spark gap	continue ⬇	162
9	19	00	100Ω	Check continuity of advance correction circuit with butterfly closed	below 1Ω	End if OK	164

NOTE *If the results of all the tests are alright and the ignition system is not working properly, replace the Microplex electronic control unit*

CHECKING ELECTRIC FUEL PUMP AND SPEEDOMETER RELAY

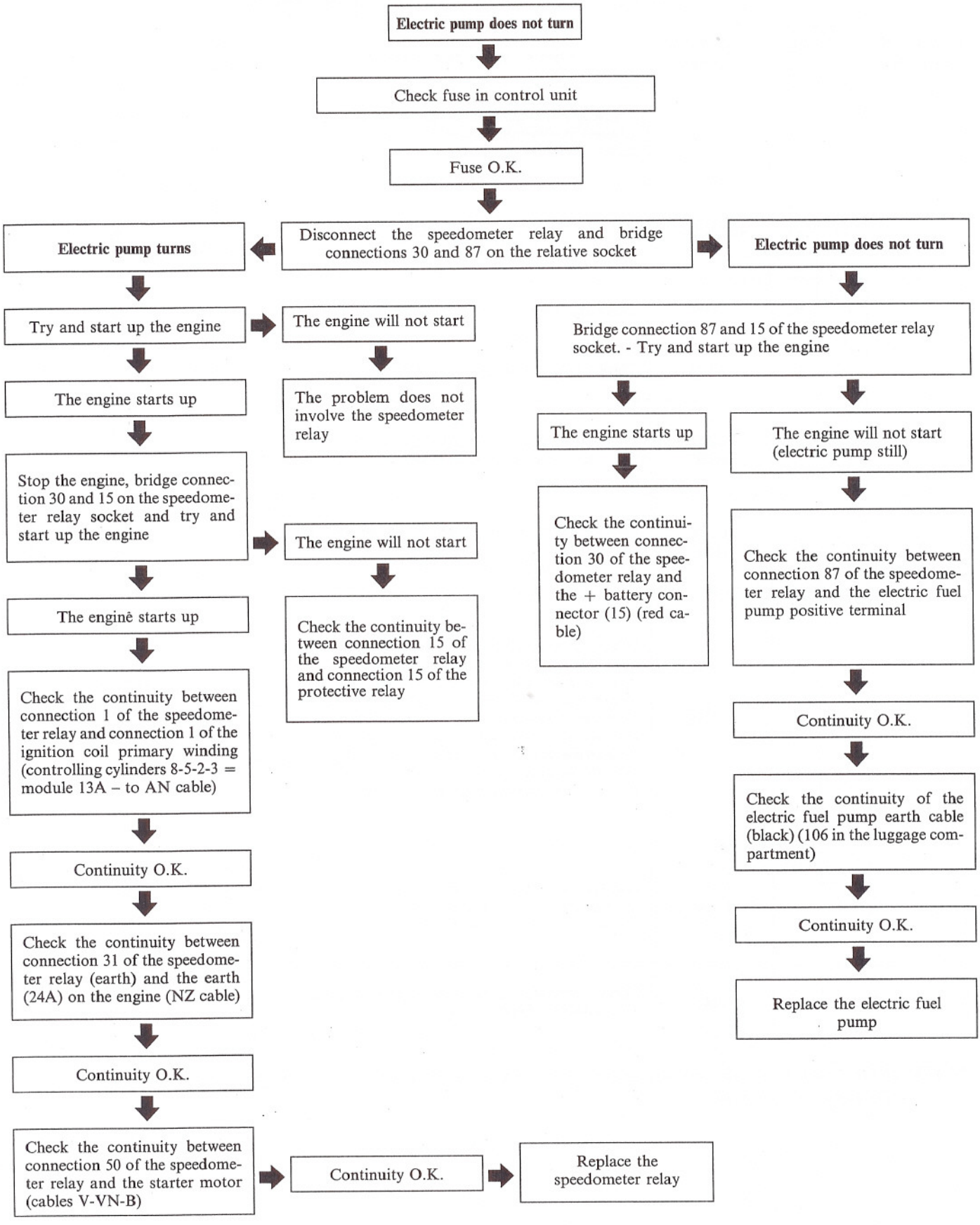

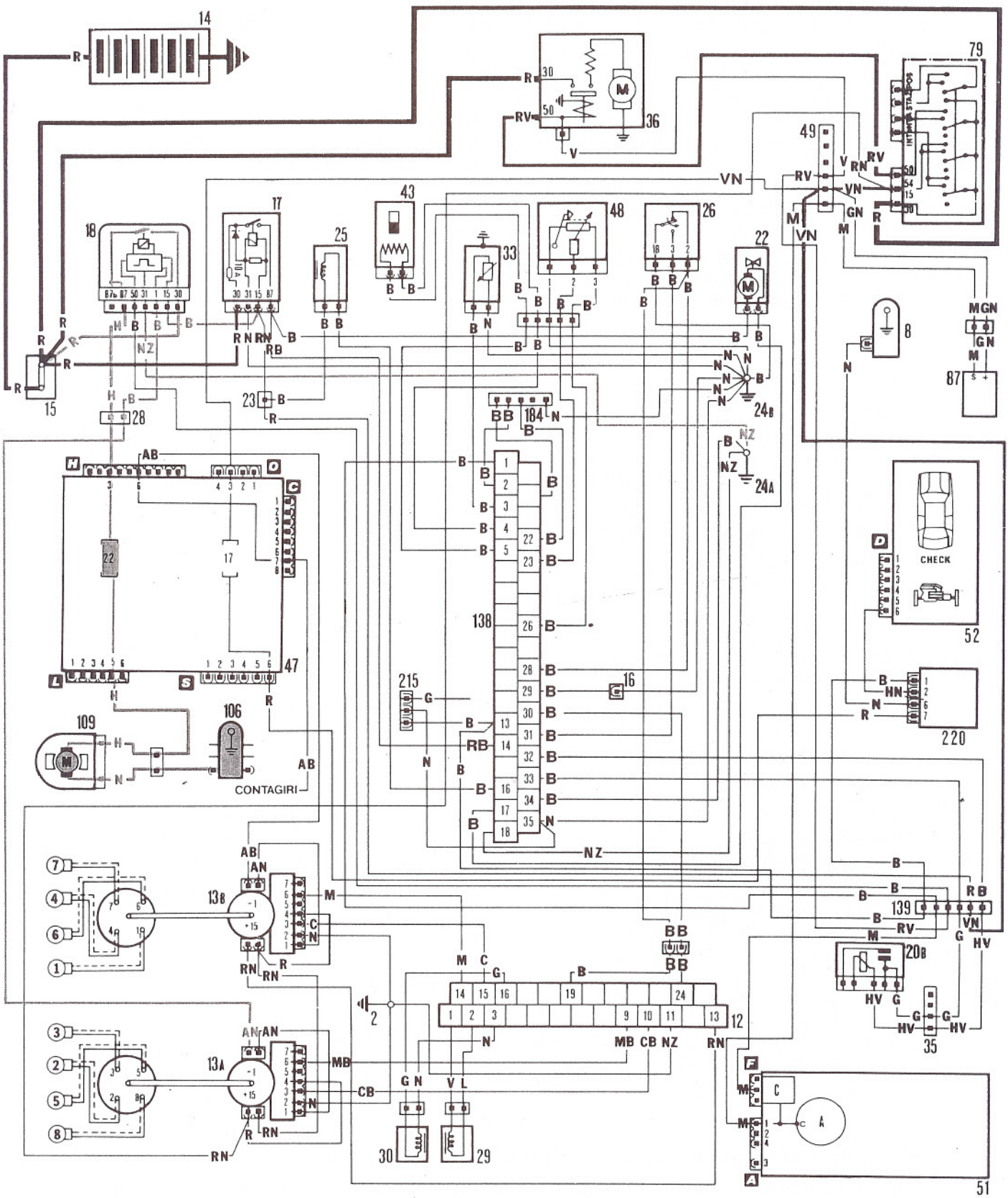

See the key on page 166 to identify the system components.

10.

CONNECTION TO VEHICLE ELECTRICAL SYSTEM REMOTE CONTROL SIMULATOR

The REMOTE CONTROL SIMULATOR (1) is a device which:
- simulates the engine temperature via the selector (4);
- controls the electric fuel pump via the switch (3);
- controls the cold start enrichment injector via the switch (2).

The simulation of the engine temperature makes it possible to carry out certain checks related to the behaviour of the injection system during the mixture enrichment stages. The temperature information involves resistance values which replace the values normally signalled by the coolant temperature sensor (16).

The remote control for the electric pump switches on the electric pump each time checks have to be carried out with the fuel system pressurized.

The remote control for the cold start injector is used to energize the latter every time the fuel system needs to be de-pressurized from the pressure at which it is kept by the accumulator for servicing operations which need to be carried out to the system hydraulic components.

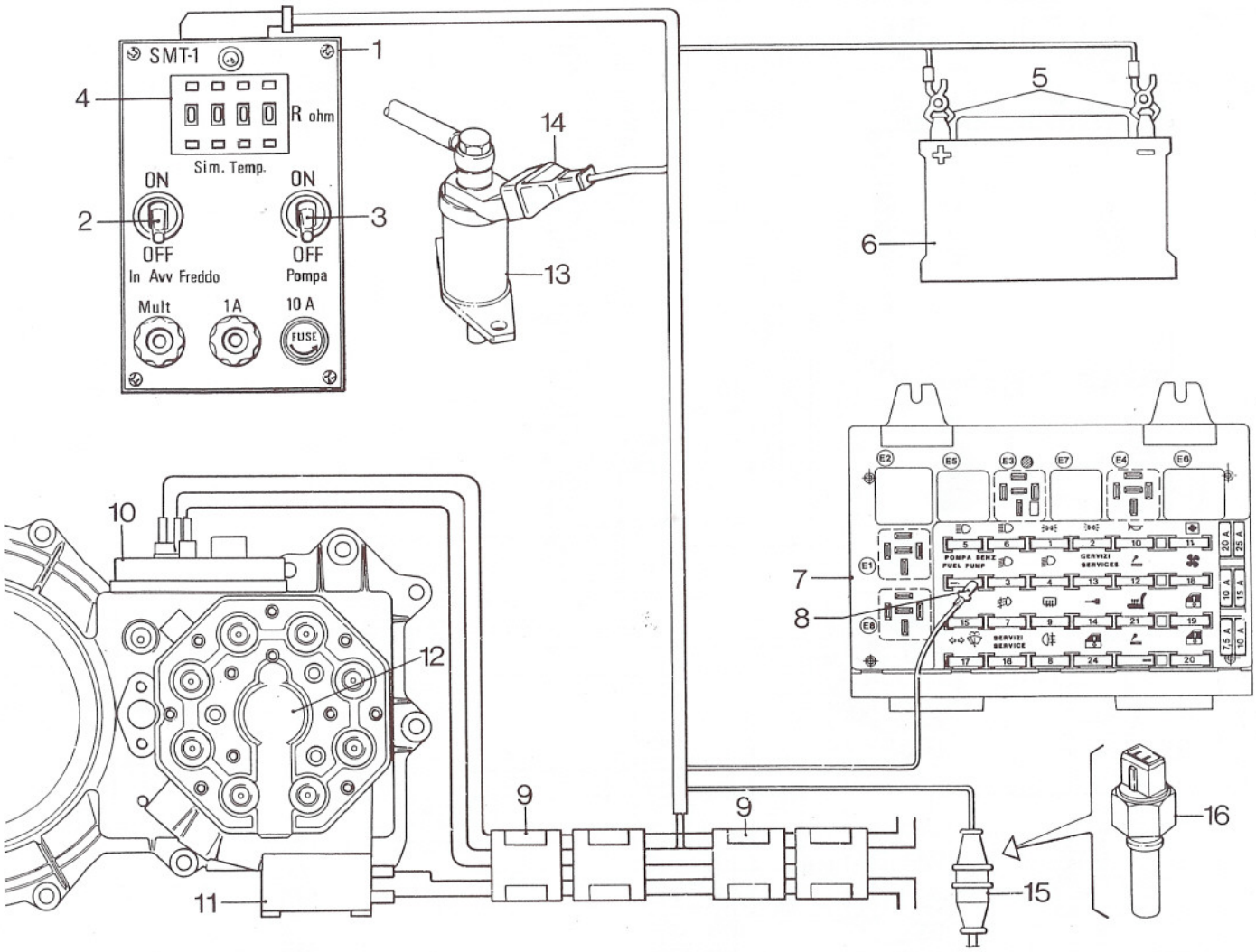

Diagram showing connection of remote control simulator to electrical system

1. Remote control simulator - 2. Cold start injector switch - 3. Electric fuel pump switch - 4. Engine temperature simulation selectors - 5. Pliers for connection to the battery - 6. Battery - 7. Fuse box - 8. Connector (to be inserted in place of the electric pump protective fuse) - 9. 5 way connector (Packard) - 10. Potentiometer on air flow meter - 11. Pressure servo regulator on fuel distribution-metering device - 12. Fuel distribution-metering device - 13. Cold start injector - 14. Connector (male, Bosch type) - 15. Connector (female, Bosch type) - 16. Coolant temperature sensor

DRAINING FUEL SYSTEM FOR SERVICING OPERATIONS

After connecting the remote control simulator to the vehicle's electrical system, as shown in the diagram on the previous page, remove the cold start injector (13) from the appropriate injection chamber; connect the nozzle to a rubber tube and place the tube in a container.
Engage the cold start injector control switch (3) until the system is not completely de-pressurized, then switch it off.

COLD START INJECTOR FUEL PRESSURE CHECK

If the engine is not running smoothly when warm, especially when idling or being started up and tends to flood, it is advisable to check the cold start injector pressure, amongst other things. There should not be any leaks because these would cause alterations in the mixture sent to the engine.
After connecting the remote control simulator as shown on page 170, proceed as follows:

- make sure that the electric fuel pump (2) and cold start injector (3) supply switches are off;
- remove the cold start injector from the injection chamber and dry the nozzle carefully;
- switch on the electric fuel pump (2) control switch (to pressurize the fuel system) and check that there are no leaks of fuel from the nozzle.

If this is not the case, replace the cold start injector.

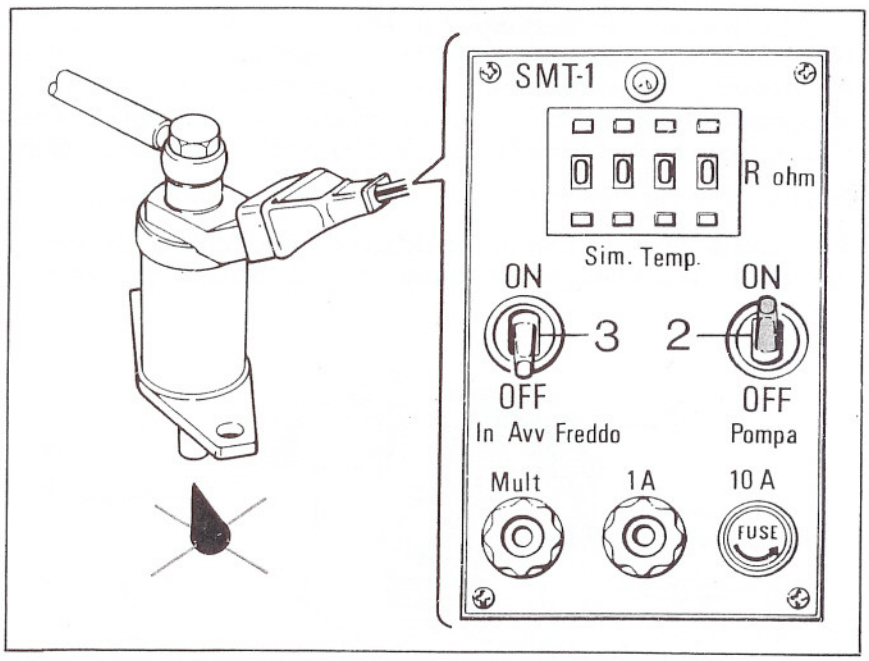

OPERATION OF COLD START INJECTOR

To carry out this test it is necessary to proceed with extreme caution in a spacious, well ventilated area where there are no sparks or naked flames. A flame extinguisher should be kept handy.

Proceed as follows:

- place the cold start injector in a container;
- switch on the electric fuel pump switch (2) (to pressurize the fuel system);
- supply the cold start injector via the switch (3);
- Check that the jet is uniformly atomized and the supply angle is around 80°.

If this is not the case, replace the cold start injector.
At the end of the test turn off the switches (2 and 3).

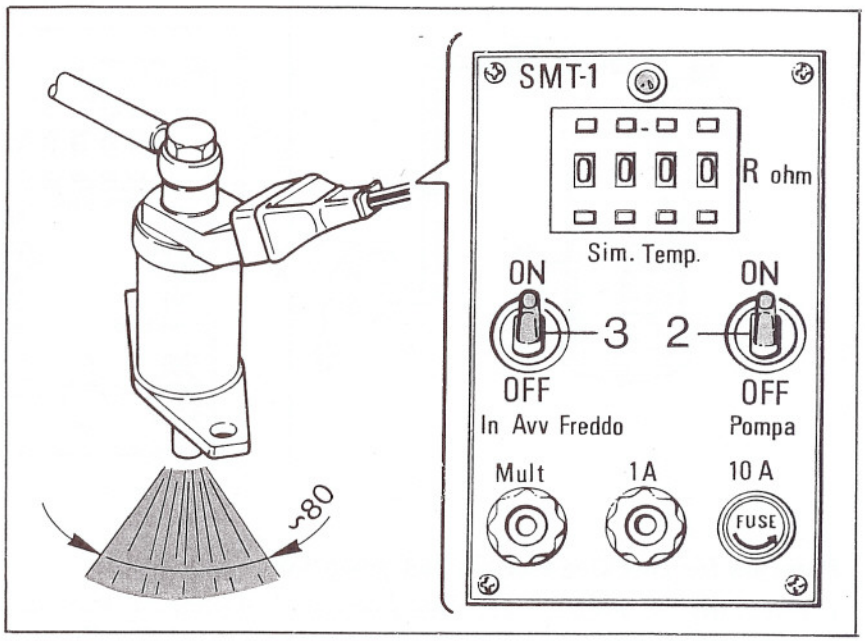

10.

ELECTRIC FUEL PUMP FLOW RATE CAPACITY

One of the most important checks which are carried out on the electric fuel pump is measuring the flow rate. To carry out this test, proceed as follows:
- loosen the union (8) for the fuel supply pipe from the electric pump;
- connect the extension pipe (supplied with a 14 x 1,25 MA female union) to the fuel supply pipe from the electric pump (see diagram below);
- place the extension pipe in a graduated test tube with a capacity of at least 1000 cc;
- supply the electric fuel pump, via the remote control simulator (pump) switch and check that the volume of fuel collected is at least equal to the minimum flow rate capacity of 1800 cc/min.

If the flow rate capacity is less than the recommended amount, check, with the electric pump supplied, that the voltage at the connection terminals is not less than 11 V. If this is not the case, check that there are no false contacts at the cables and at the electric pump supply connections.
Check that the fuel filter is not blocked and, if necessary, replace it.

NOTE *The fuel filter should be replaced every 10,000 km.*

Also check the condition of the delivery pipes between the electric pump, the pressure accumulator and the fuel filter. If no defects are found, replace the electric pump.

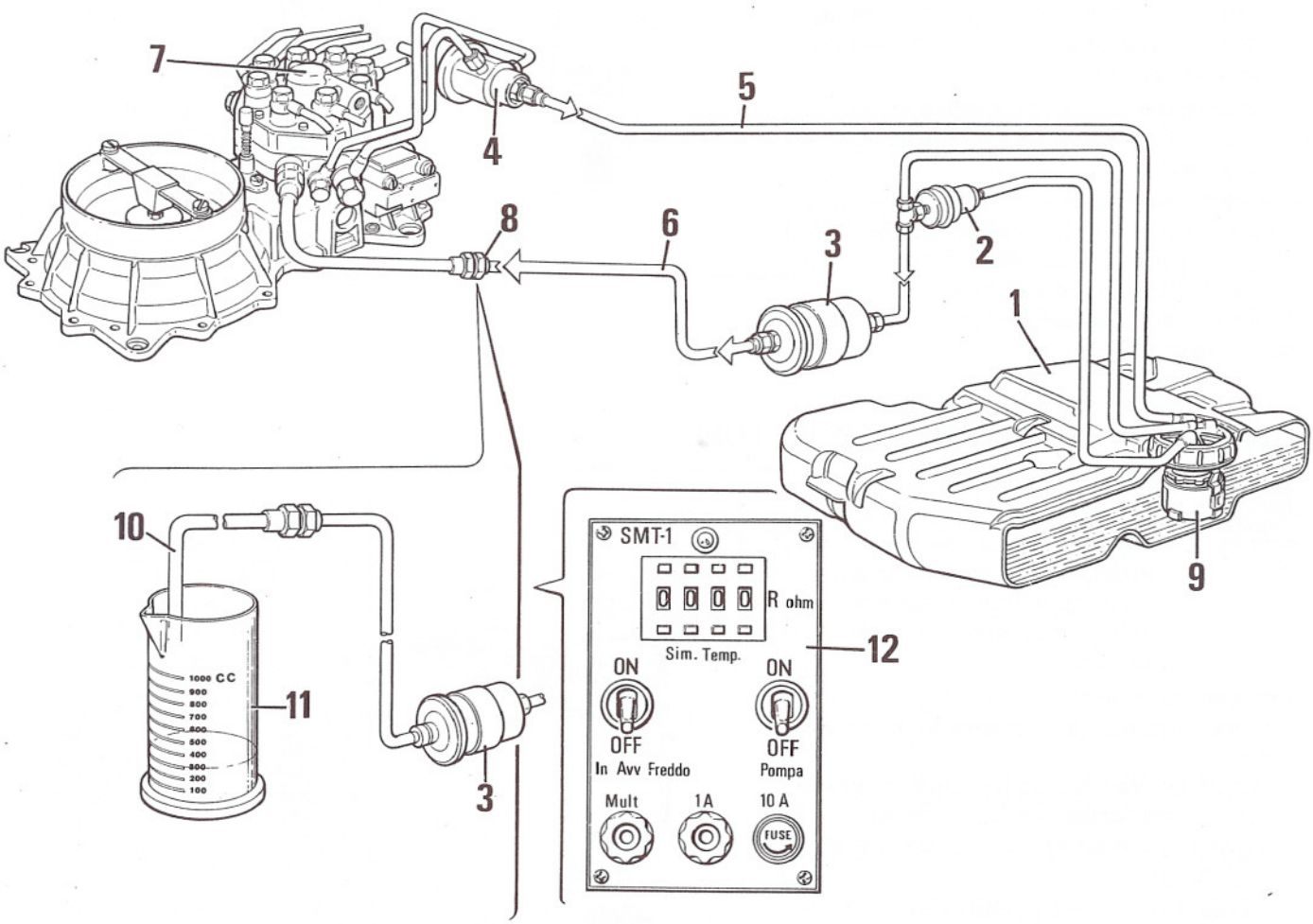

Diagram for checking electric fuel pump flow rate capacity

1. Fuel tank - 2. Pressure accumulator - 3. Fuel filter - 4. Pressure regulator - 5. Fuel return pipe to the tank - 6. Fuel supply pipe from the electric pump - 7. Fuel distribution-metering device - 8. Union for fuel supply pipe from the electric pump - 9. Electric pump - 10. Extension pipe - 11. Graduated test tube - 12. Remote control simulator.

CHECKING FUEL SYSTEM PRESSURE (Ps)

In order to carry out this check, proceed as follows:
- loosen the union (8) on the fuel supply pipe from the electric pump;
- connect the T union with the pressure gauge to the pipe supplying fuel to the distribution-metering device (as illustrated in the diagram below);
- supply the electric fuel pump, via the switch (pump) on the remote control simulator;
- using the pressure gauge, check that the system pressure (Ps) is between 6,15 - 6,5 bar.

If the reading is higher: check that the pressure regulator connecting pipes (5), (12), (13) are not obstructed or constricted and, if necessary, ensure that the system is running smoothly again. If the fault persists, replace the pressure regulator.

If the reading is lower: make sure that there are no leaks in the system. If no defects are located, replace the pressure regulator.

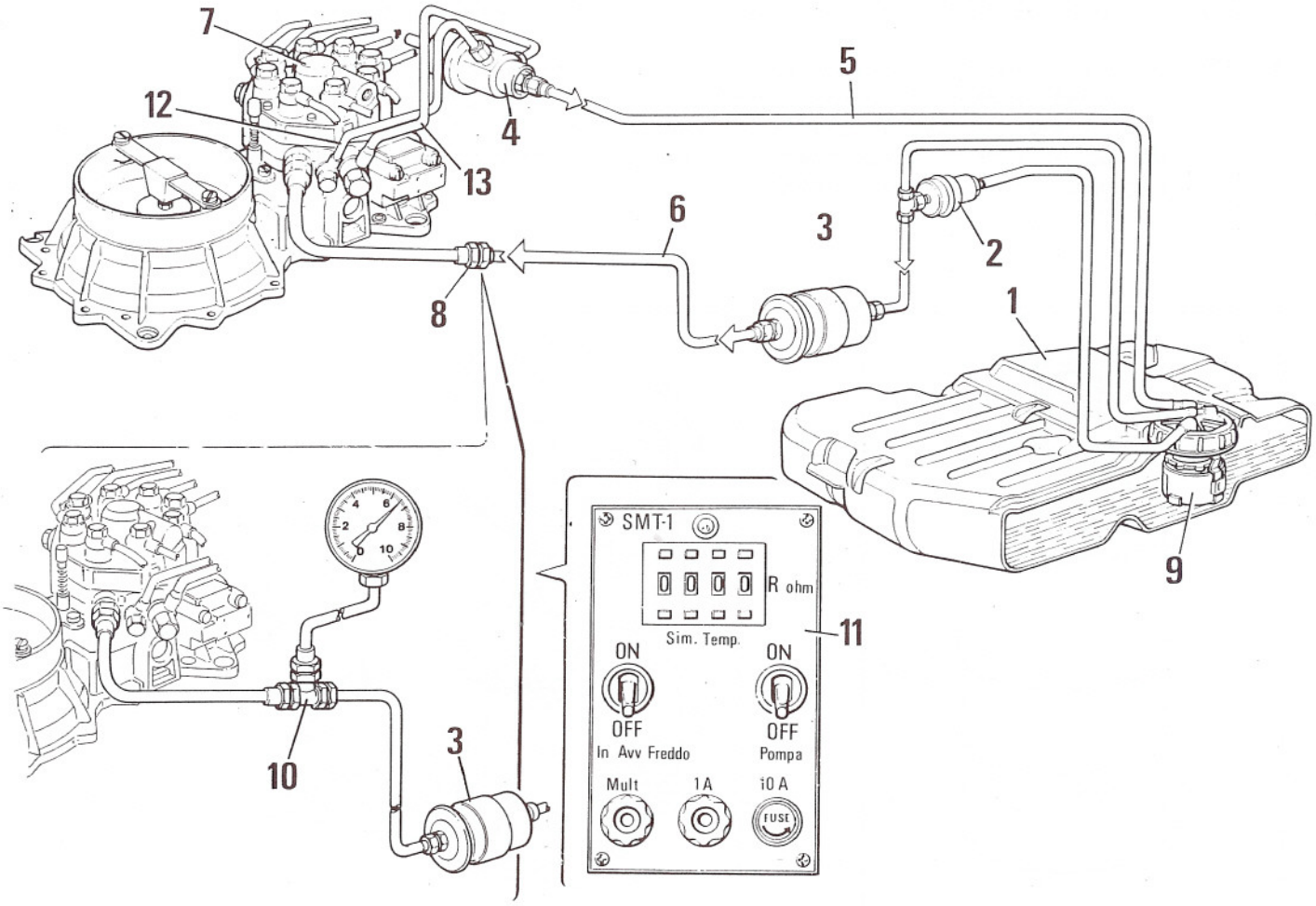

Diagram for checking the main fuel pressure

1. Fuel tank - 2. Pressure accumulator - 3. Fuel filter - 4. Pressure regulator - 5. Fuel return pipe to the tank - 6. Fuel supply pipe from the electric pump - 7. Fuel distribution-metering device - 8. Union for pipe supplying fuel from the electric pump - 9. Electric pump - 10. T union complete with pressure gauge - 11. Remote control simulator - 12. Pressure discharge pipe between the fuel distribution-metering device and the pressure regulator - 13. Main pressure return pipe to the pressure regulator.

10.

CHECKING FUEL SUPPLY SYSTEM (OPERATING) PRESSURE

This check should be carried out, after checking the main pressure, in the following way:
- leave the equipment with the pressure gauge connected in the same position as for checking the system pressure (Ps) (previous test);
- switch off the electric pump supply via the remote control simulator switch (pump);
- using the pressure gauge, check that the main pressure value decreases rapidly and stabilizes at ⩾ 3.4 bar;
- check any further falls in pressure on the gauge:
  - after 10 minutes the pressure should be ⩾ 3.3 bar
  - after 20 minutes the pressure should be ⩾ 3.2 bar

If the operating pressure falls too quickly, proceed in the following way:

1. Check whether there are any leaks from the fuel supply unions and, if necessary, replace the seals.
2. Remove the fuel return pipe between the pressure regulator and the tank and check that there are no leaks of fuel. If there are, replace the pressure regulator.
3. Replace the electric pump valve (A) if no fuel comes out of the pressure regulator after the fuel return pipe to the tank is removed]
4. If the results of the above tests prove negative, the pressure accumulator has to be replaced.

NOTE *A loss in operating pressure associated with difficulties in starting the engine when warm (tendency to flood) may be caused by a leak between the metering piston and the distribution cylinder. If this is the case, the complete fuel distribution unit has to be replaced as it cannot be overhauled. Before replacing the fuel distribution device however, it is worth checking the various components and unions which comprise the system very carefully.*

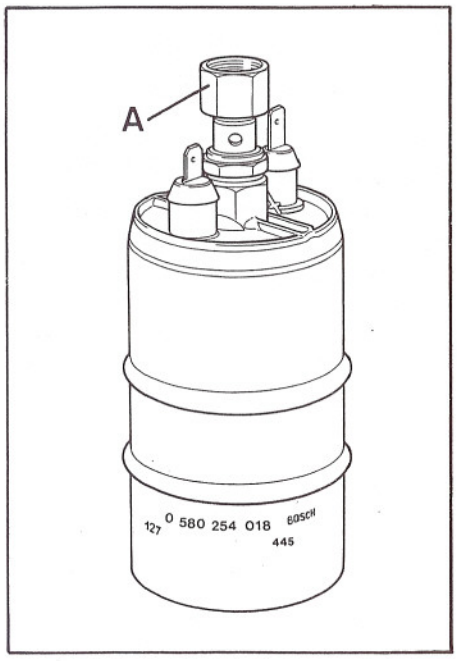

A - Operating pressure valve on electric pump

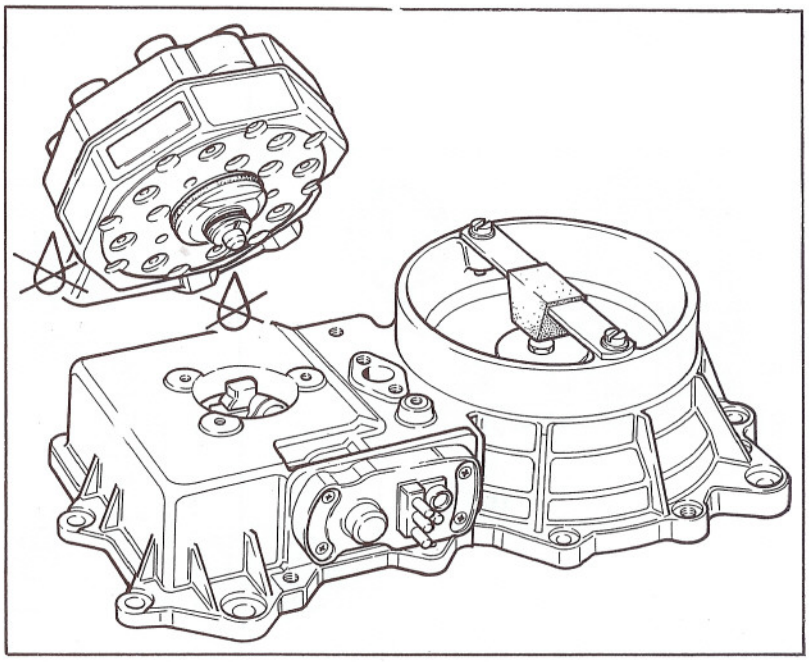

Checking for fuel leaks between the metering piston and distribution cylinder

CHECKS ON FUEL DISTRIBUTION-METERING DEVICE AND AIR FLOW METER

In order to carry out the checks in question it is necessary to be able to gain access to the fuel distribution-metering device and the air flow meter which involves removing the upper inlet manifold.
The chapters which follow contain all the tests which can only be carried out with the upper inlet manifold removed.

CHECKING SLIDING OF METERING PISTON AND AIR FLOW METER LEVERS

After having removed the upper inlet manifold, proceed as follows:
- remove the (metal) inlet pipe between the air filter and the air flow meter in order to gain access to the floating plate;
- slowly, push and release the floating plate and make sure that the resistance is the same for its entire travel;
- push and release the floating plate quickly until it is close to the rest position. Straight after it has reached this position it should be possible to hear that the metering piston is resting on the internal lever having completed its return stroke.

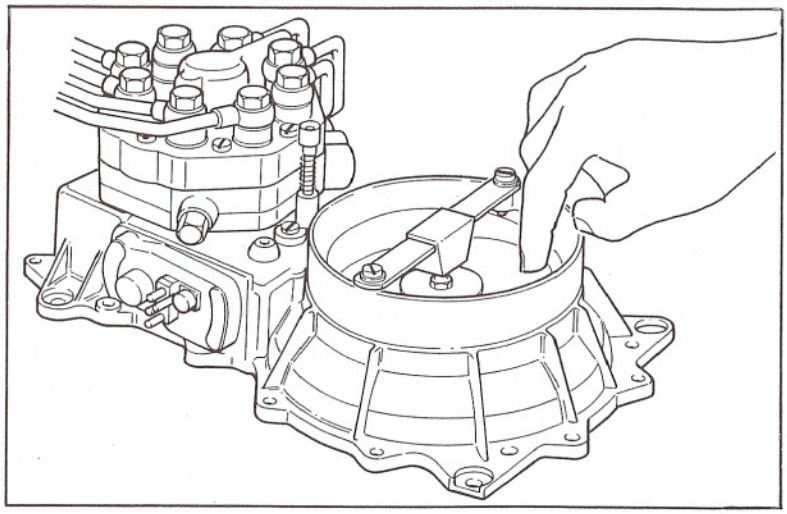

NOTE *In the rest position the metering piston should not rest on the internal lever.*

If no faults are detected during the above tests, the metering piston and the air flow meter levers must be sliding correctly.
If the results of the above tests are negative, the next test has to be carried out.

CHECKING FUEL METERING PISTON VACUUM LEVER MOVEMENT

If the metering piston or the levers are not sliding correctly it is necessary to ascertain which of the two units is faulty.

In order to do this the fuel distribution-metering device has to be carefully removed from the meter (undo the three fixing bolts) to be able to check the movement of the levers without interference from the metering piston.

Carefully move the distribution-metering device away from its housing in the meter and check whether the levers move freely for their entire travel (this operation should be carried out with extreme caution).

If the result of this test is positive, the distribution-metering device has to be replaced because the defect involves the poor or non existent sliding of the piston in the metering cylinder.

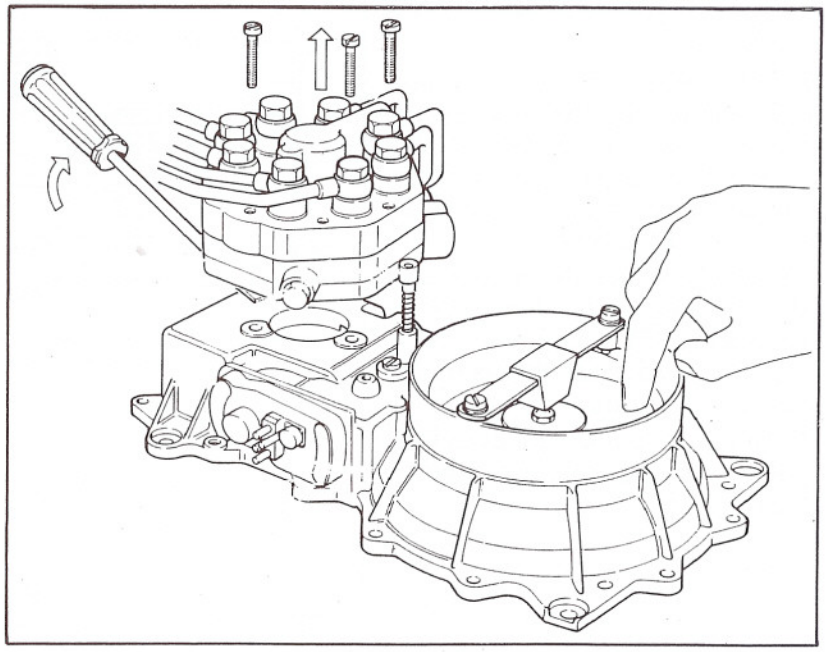

If, on the other hand, the fault involves the movement of the levers-floating plate, before replacing the air flow meter, the following checks have to be carried out.

Loosen all the bolts fixing the air flow meter to the engine and check, once again, by pressing on the floating plate, whether the levers move freely; if they do, the fault is attributable to a momentary distortion of the meter casing.

In order to correct this, replace the seal and tighten all the fixing bolts evenly.

If the fault persists, the air flow meter has to be replaced.

NOTE *Never carry out any adjustments to the bolts fixing the levers to the balance shaft.*

10.

CHECKING AXIAL POSITION OF FLOATING PLATE AND CONTROL LEVERS

Checking stop position

The correct rest position is the one assumed by the floating plate with the engine switched off without the levers resting on the metering piston. In order to discover the rest position of the floating plate, proceed as follows:

- check the reference position, using a depth gauge (4) positioned opposite the CO adjustment screw, measure distance X between the edge of the flow meter upper cone and the floating plate positioned in such a way that its upper corner coincides with the lower corner of the cylindrical section of the Venturi cone;
- check the stop (or rest) position, measure distance Y (floating plate in stop position) and subtract it from distance X: the result should be around 5 - 5.2 mm.

If the position found does not correspond with the value given, the lever stop point (6) defined by the contact with the stop for the pin (1) with the stop plate (2) has to be modified.

In order to alter the position of the retaining pin (1) in relation to the spring (2) a hammer and a drift are needed (as shown in the middle diagram).

Extreme care must be exercised when carrying out this operation.

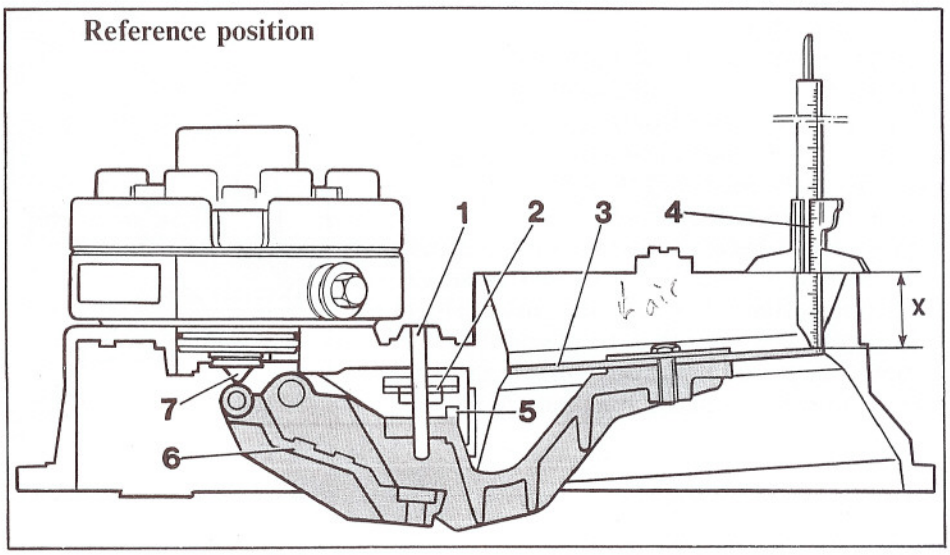

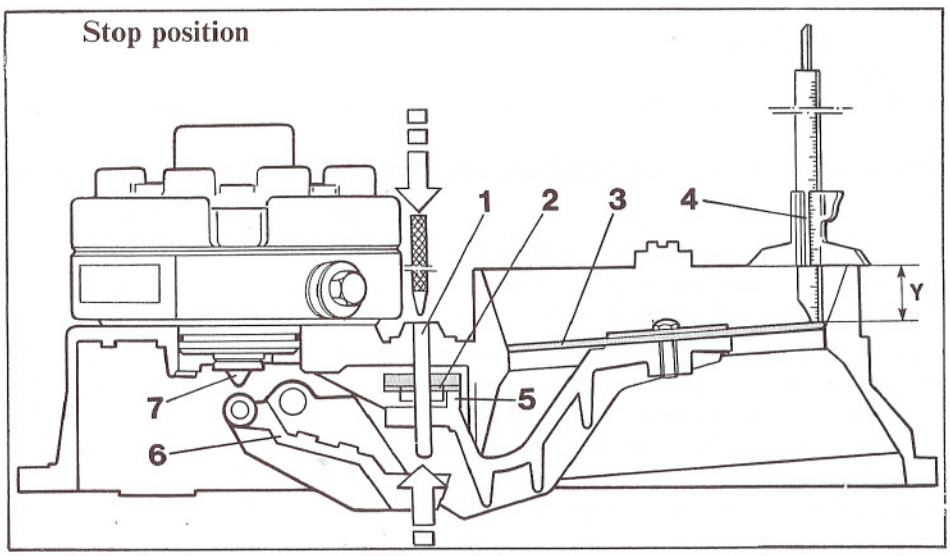

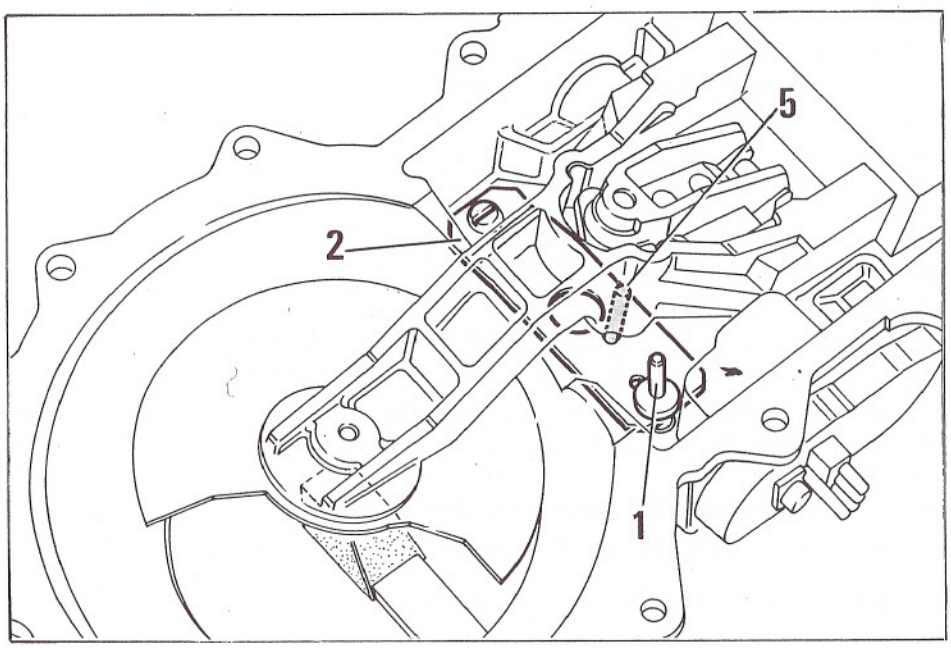

Diagram for checking axial position of floating plate and control levers

1. Spring retaining pin - 2. Levers stop spring - 3. Floating plate - 4. Depth gauge - 5. Lever stop pin - 6. Levers - 7. Metering piston.

CHECKING CONTACT POSITION

The contact position refers to the position assumed by the lver when it starts to rest on the metering piston with the fuel system pressurized.

The contact position should be checked and, if necessary, adjusted every time adjustments are made to the air flow meter levers or the fuel distribution-metering device.

This position is important because it is involved in determining the start of the delivery to the injectors depending on the position of the floating plate.

In order to carry out this adjustment, proceed as follows:
- using tool 1850191000 press the CO adjustment screw (1) to the end of its travel in order to be able to adjust the mixture metering screw below;
- check that the travel for the floating plate is 2 - 2.2 mm, from the rest position (B) to the position in which the lever (3) touches the metering piston (4 - position C). Position (C) is felt by touch.

NOTE *From the moment the ratio betwen the levers is 1 to 7, the movement of the floating plate is 2 - 2.2 mm, from the rest position (B) to the contact position (C), this corresponds to around 0.3 mm for the recommended clearance between the lever (3) and the metering piston (4).*

It is vital to adjust the contact position before starting up the engine for the first time after any adjustments involving the metering device or the air flow meter.

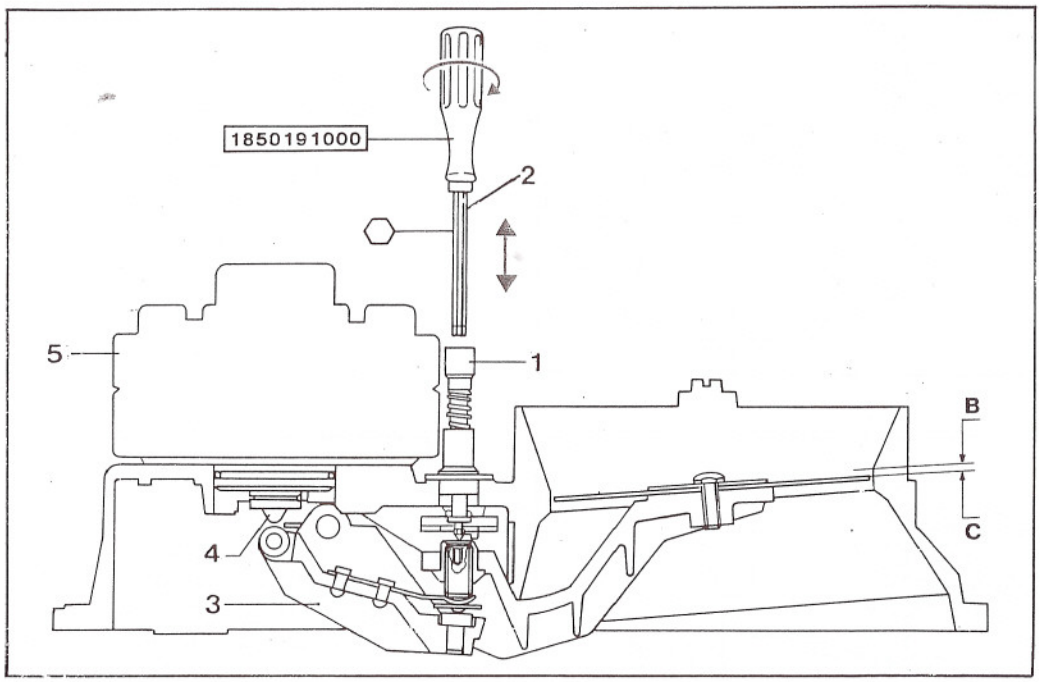

Diagram for checking contact position

1. CO adjustment screw - 2. Spanner 1850191000 for CO adjustment screw - 3. Levers - 4. Metering piston - 5. Fuel distribution-metering device - B. Floating plate rest position - C. Floating plate contact position.

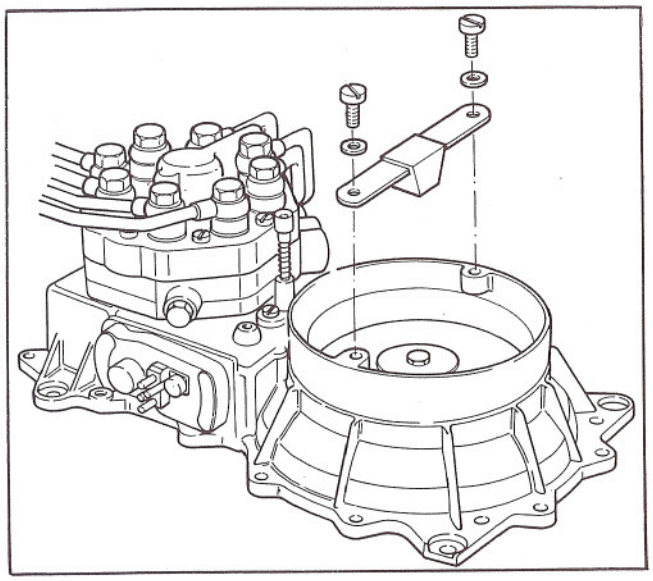

CHECKING RADIAL POSITION OF FLOATING PLATE

If the floating plate is not properly centered and interferes with the venturi cone, the following must be done:

- remove the rubber stop from the Venturi cone;

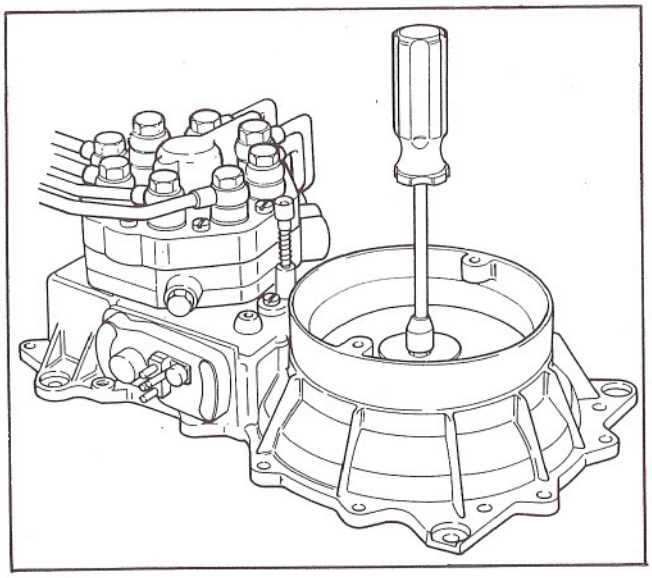

- loosen the centre bolt fixing the plate. It is fixed with a sealant (LOCTITE) so it may be necessary to heat it slightly in order to undo it;
- centre the floating plate in relation to the Venturi cone fitting four 0.05 mm shims in four diametrically opposed points;
- retighten the bolt, remove the shims and refit the stop.